A: MATERIAL:
1. HOUSING: PBT WITH 30% GLASS FIBER UL 94V-0
2. TERMINAL:COPPER ALLOY

B:CHARACTERISTICS:
1. RATING:10A250V AC
2. INSULATION RESISTANCE:OVER 100MΩ 500VDC
DIELECTRIC STRENGTH:2000V AC 1 MINUTE

C:APPROVALS:
UL, CSA, VDE, DEMKO,SEMKO, SEV ,FIMKO& NEMKO CCC, KTL

D:ORDERING OPTIONS:

ORDER#	ITEM REQ.	TERMINAL DIFFERENCES
2111-PQA-G	① + ②	4.8 SOLDER/Q.D. TABS

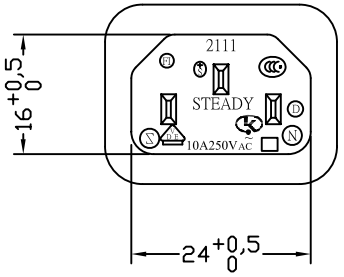

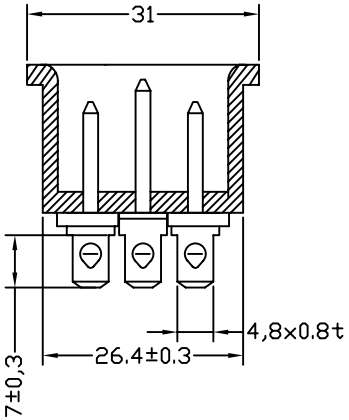

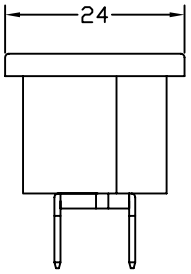

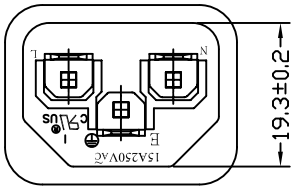

ITEM	PART NO.	PART NAME	Q'TY	SPECIFICATION	MATERIAL	REMARKS
4	T-07RQ	TERMINAL	3 PCS	Ø4.8wx0.8t	COPPER ALLOY	TIN-PLATED
3	T-07PB	TERMINAL	2 PCS		COPPER ALLOY	TIN-PLATED
2	T-07PA	TERMINAL	1 PCS		COPPER ALLOY	TIN-PLATED
1	H-11-PA-G	HOUSING	6.1g	SNAP-IN TYPE	PA66	THERMOPLASTIC

深圳市仁达电子有限公司
SHEN ZHEN STEADY ELECTRONICS CORPORATION

PART NO.: 2111-PQA-G

NAME: SNAP-IN TYPE AC INLET 3P

TOLERANCE UNLESS OTHERWISE MARKED
DIMENSION: 0 ~ 6 : ±0.1; 6 ~30 : ±0.2; 30~120: ±0.3
ANGULAR ±0.5

MATERIAL: SEE ABOVE

SPEC.: —

APPROVED	CHECKED	DRAW BY	JOB NO.:
		谢莉萍 08/05/15	

A4	UNIT: mm	SCALE 1:1	SHEET 1 OF 1

REV	DATE	DESCRIPTION	WRITE	APPD.
A. 0	2008. 05. 15	RE DRAWING	谢莉萍	