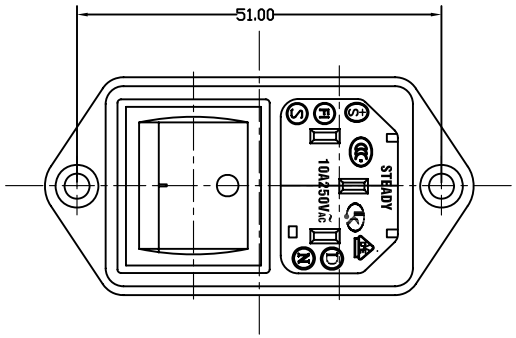

A: MATERIAL:
1. HOUSING: PBT+30%GF UL 94V-2
(UL 94V-0 ON REQUEST)
2. TERMINAL:COPPER ALLOY

B:CHARACTERISTICS:
1. RATING:10A250V AC UL/EUROPE
15A250V AC CSA
2. INSULATION RESISTANCE:OVER 100MΩ 500VAC
DIELECTRIC STRENGTH:2000V AC 0.5mA 1 MINUTE

C:APPROVALS:
UL, CSA, VDE, DEMKO,SEMKO, SEV ,FIMKO& NEMKO , CCC , KTL

D:DIAGRAM

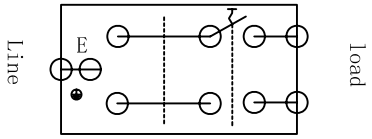

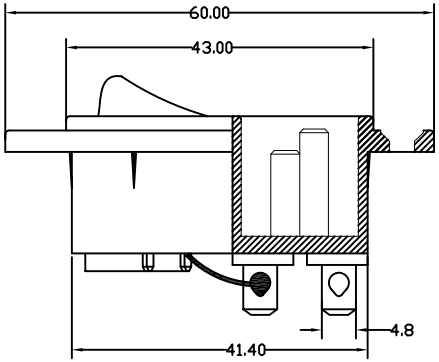

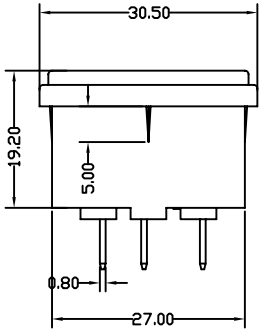

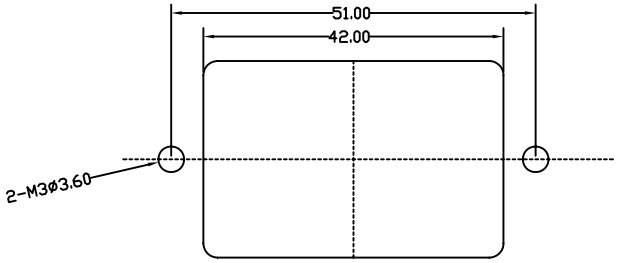

PANEL CUT-OUT

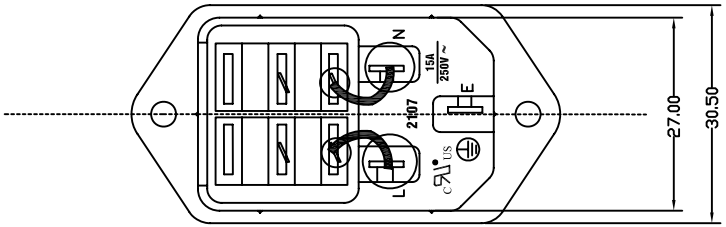

ITEM	PART NO.	PART NAME	Q'TY	SPECIFICATION	MATERIAL	REMARKS
4	R13-3-A11-A11(Z)	SWITCH	1PCS			
3	T-07QB	TERMINAL	2PCS	Ø4.8wx0.8t	COPPER ALLOY	TIN-PLATED
2	T-07QA	TERMINAL	1PCS	Ø4.8wx0.8t	COPPER ALLOY	TIN-PLATED
1		HOUSING	9. 7g	SNAP-IN TYPE	PBT+30%GF	THERMOPLASTIC

深圳市仁达电子有限公司
SHEN ZHEN STEADY ELECTRONICS CORPORATION

PART NO.: 2107-CQ-2S-G

NAME: AC INLET 3P WITH SWITCH

TOLERANCE UNLESS OTHERWISE MARKED
DIMENSION: 0 ~ 6 : ±0.1; 6 ~30 : ±0.2; 30~120: ±0.3
ANGULAR ±0.5

MATERIAL: SEE ABOVE

SPEC.: —

APPROVED	CHECKED	DRAW BY	JOB NO.:
		侯锡强 08/02/22	

A4	UNIT: mm	SCALE 1:1	SHEET 1 OF 1

REV	DATE	DESCRIPTION	WRITE	APPD.
A. 0	2008. 02. 22	NEW DRAWING	侯锡强	