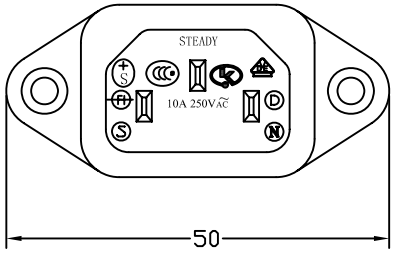

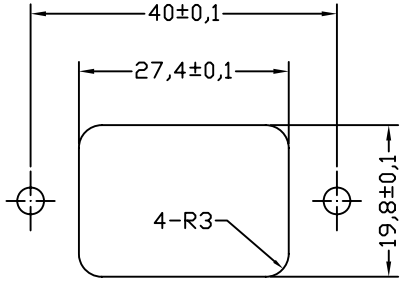

FOR FRONT MOUNTING USE

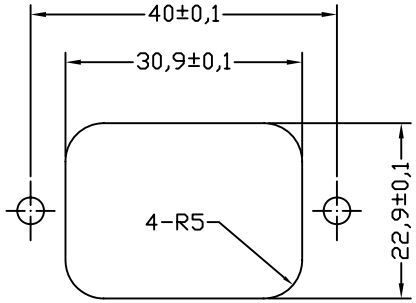

FOR REAR MOUNTING USE

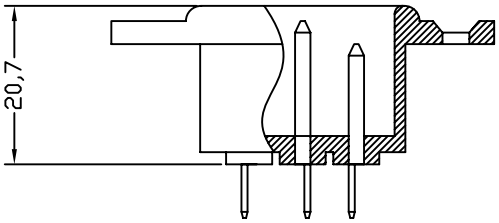

PANEL CUT-OUT

A:MATERIAL:
1. HOUSING: PBT WITH 30% GF UL 94V-0
2. TERMINAL:COPPER ALLOY

B:CHARACTERISTICS:
1. RATING:10A250V AC EUROPE
15A250V AC NORTH AMERICA
2. INSULATION RESISTANCE:OVER 100MΩ 500V DC
DIELECTRIC STRENGTH:2000V AC 0.5mA ,1 MINUTE

C:APPROVALS:
UL, CSA, VDE, DEMKO,SEMKO, SEV ,FIMKO& NEMKO , CCC, KTL

D:ORDERING OPTIONS:

ORDER#	ITEM REQ.	TERMINAL DIFFERENCES
2107-CQ-G	① + ②	4.8 SOLDER/Q.D.TABS

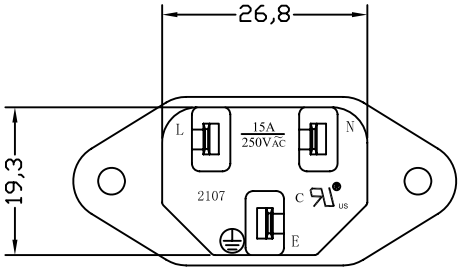

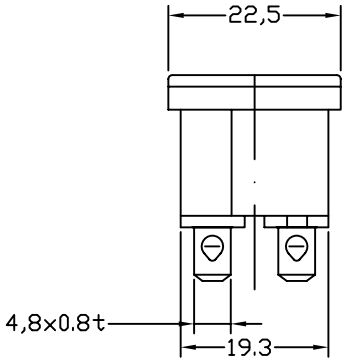

ITEM	PART NO.	PART NAME	Q'TY	SPECIFICATION	MATERIAL	REMARKS
3	T-07QB	TERMINAL	2PCS	Ø4.8wx0.8t	COPPER ALLOY	TIN-PLATED
2	T-07QA	TERMINAL	1PCS	Ø4.8wx0.8t	COPPER ALLOY	TIN-PLATED
1		HOUSING	7g	SNAP-IN TYPE	PBT+30%GF	THERMOPLASTIC

深圳市仁达电子有限公司
SHEN ZHEN STEADY ELECTRONICS CORPORATION

PART NO.: 2107-CQ-G

NAME: SCREW-MOUNT AC INLET

TOLERANCE UNLESS OTHERWISE MARKED
DIMENSION: 0 ~ 6 : ±0.1; 6 ~30 : ±0.2; 30~120: ±0.3
ANGULAR ±0.5

MATERIAL: SEE ABOVE

SPEC.: ——

REV	DATE	DESCRIPTION	WRITE	APPD.
A.0	2008.02.22	RE DRAWING	侯锡强	

A4 | UNIT: mm | SCALE 1:1 | SHEET 1 OF 1

APPROVED	CHECKED	DRAW BY	JOB NO.:
		侯锡强 08/02/22	